Work Order ID 69859

Friday, May 20, 2011 10:40:57 AM

Item ID: D3172-041 **Accept** **Setup Start**

Revision ID: **Stop**

Item Name: Basket Base Assembly

Start Date: 5/20/2011 **Start Qty:** 1.00 **Cust Item ID:**

Required Date: 6/10/2011 **Req'd Qty:** 1.00 **Customer:**

Reference:

Approvals: **Process Plan:** CL **Date:** 11/05/20 **Tooling:** _____ **Date:** _____ **Run Start**

QC: _____ **Date:** _____ **SPC (Y/N):** _____ **Date:** _____ **Stop**

Sequence ID/ Work Center ID	Operation Description	Set Up/ Run Hours	Tool ID	Tool #	Plan Code	Accept Qty	Reject Qty	Reject Number	Insp. Stamp
Draw Nbr	**Revision Nbr**								
D3172	Rev C								
100		0.00							
Large Fab	Large Fab								
	Memo	0.00							
Large Fab	1-Cut Qty 4 D3166-1 as per Dwg D3172 2-Cut 3/4" x 3/4" square tubing as per Dwg D3172 3-Drill holes in D3172-3 as per Dwg D3172 4-Deburr & Remove all markings from material 5-Weld as per Dwg D3172 using Welding Table and corner Jig & D3172T1 6- Use DT 8996 jig to locate D3174-1 as per dwg 7- Deburr								
110	QC9- Inspect visual per QSI004- Fusion Welds	0.00							
QC	**Memo**	0.00							
Quality Control									

CL 11-06-07

11·06·07 1 8 BE 11/06/07

Dart Aerospace Ltd

W/O:		WORK ORDER CHANGES					
DATE	STEP	PROCEDURE CHANGE	By	Date	Qty	Approval Chief Eng / Prod Mgr	Approval QC Inspector

Part No: _____ **PAR #:** _____ **Fault Category:** _____ **NCR:** Yes No **DQA:** _____ **Date:** _____

Resolution: _____ **Disposition:** _____ **QA: N/C Closed:** _____ **Date:** _____

NCR:		WORK ORDER NON-CONFORMANCE (NCR)						
DATE	STEP	Description of NC Section A	Corrective Action Section B			Verification Section C	Approval Chief Eng	Approval QC Inspector
			Initial Chief Eng	Action Description Chief Eng	Sign & Date			

NOTE: Date & initial all entries

Work Order ID 69859

Friday, May 20, 2011 10:40:57 AM

Item ID: D3172-041 **Accept** **Setup Start**

Revision ID:

Item Name: Basket Base Assembly **Stop**

Start Date: 5/20/2011 **Start Qty:** 1.00 **Cust Item ID:**

Required Date: 6/10/2011 **Req'd Qty:** 1.00 **Customer:**

Reference:

Run Start

Approvals: **Process Plan:** _____ **Date:** _____ **Tooling:** _____ **Date:** _____

Stop

QC: _____ **Date:** _____ **SPC (Y/N):** _____ **Date:** _____

Sequence ID/ Work Center ID	Operation Description	Set Up/ Run Hours	Tool ID	Tool #	Plan Code	Accept Qty	Reject Qty	Reject Number	Insp. Stamp
120	QC6- Inspect dimensions to drawing	0.00							
QC	Memo	0.00							
Quality Control									
125	Pressure Wash per QSI005 4.3	0.00							
HandFinish	Memo	0.00							
Hand Finishing									

1x 11/06/07

Dart Aerospace Ltd

W/O:		WORK ORDER CHANGES					
DATE	STEP	PROCEDURE CHANGE	By	Date	Qty	Approval Chief Eng / Prod Mgr	Approval QC Inspector

Part No: _____ **PAR #:** _____ **Fault Category:** _____ **NCR:** Yes No **DQA:** _____ **Date:** _____

Resolution: _____ **Disposition:** _____ **QA: N/C Closed:** _____ **Date:** _____

NCR:		WORK ORDER NON-CONFORMANCE (NCR)						
DATE	STEP	Description of NC Section A	Corrective Action Section B			Verification Section C	Approval Chief Eng	Approval QC Inspector
			Initial Chief Eng	Action Description Chief Eng	Sign & Date			

NOTE: Date & initial all entries

Work Order ID 69859

Friday, May 20, 2011 10:40:57 AM

Item ID: D3172-041 **Accept** **Setup Start** **Stop**

Revision ID:

Item Name: Basket Base Assembly

Start Date: 5/20/2011 **Start Qty:** 1.00 **Cust Item ID:**

Required Date: 6/10/2011 **Req'd Qty:** 1.00 **Customer:**

Reference:

Run Start **Stop**

Approvals: **Process Plan:** _____ **Date:** _____ **Tooling:** _____ **Date:** _____

QC: _____ **Date:** _____ **SPC (Y/N):** _____ **Date:** _____

Sequence ID/ Work Center ID	Operation Description	Set Up/ Run Hours	Tool ID	Tool #	Plan Code	Accept Qty	Reject Qty	Reject Number	Insp. Stamp
130	White Gloss(Ref:4.3.5.1) per QSI005 4.3-Alum	0.00							
Powdercoat									
Powder Coating	**Memo**	0.00							

1X Ø M-L 11/06/07

1ST COAT:
START TIME: 3:00
OVEN TEMPERATURE: 400 0F
FINISH TIME: 3:30

M116964

********** 2nd coat if necessary **********

2ND COAT:
START TIME: _____
OVEN TEMPERATURE: _____
FINISH TIME: _____

140	QC3- Inspect Part Finish	0.00							
QC	**Memo**	0.00							
Quality Control									

1 BR 11-6-8.

Dart Aerospace Ltd

W/O:		WORK ORDER CHANGES					
DATE	STEP	PROCEDURE CHANGE	By	Date	Qty	Approval Chief Eng / Prod Mgr	Approval QC Inspector

Part No: _____ **PAR #:** _____ **Fault Category:** _____ **NCR:** Yes No **DQA:** _____ **Date:** _____

Resolution: _____ **Disposition:** _____ **QA: N/C Closed:** _____ **Date:** _____

NCR:		WORK ORDER NON-CONFORMANCE (NCR)						
DATE	STEP	Description of NC Section A	Corrective Action Section B			Verification Section C	Approval Chief Eng	Approval QC Inspector
			Initial Chief Eng	Action Description Chief Eng	Sign & Date			

NOTE: Date & initial all entries

Picklist Print

Friday, May 20, 2011 10:40:54 AM

Work Order ID: 69859

Parent Item: D3172-041

Parent Item Name: Basket Base Assembly

Start Date: 5/20/2011 **Required Date:** 6/10/2011

Start Qty: 1.00 **Required Qty:** 1.00

Comments: IPP Rev:B□04.01.05□Added Step 5 inspection□KJ/RF
IPP Rev:C 08-08-29 revC as per dwg DD verified by:EC IPP Rev:D
11.04.04 added pressure wash DD VERF:EC

Component Item ID/ Item Name	Replacement Item ID	Mfg/ Purch	Bin Item	Primary Location	Last Location	Route Seq ID	Unit of Measure	Qty on Hand	Qty per Kit	Total Qty	Qty Issued	Date Issued	Status
D2012-117		Manufactured	No			100	Each	20.0000	2	2			
Clevis													
				Location			**Loc Qty**		**Loc Code**				
				WA005			20						
					55729		20						
D2232-3		Manufactured	No			100	Each	16.0000	2	2			
Basket Hinge													
				Location			**Loc Qty**		**Loc Code**				
				WA005			16						
					69211		16						
D2327-3		Manufactured	No			100	Each	19.0000	2	2			
Spacer Bushing													
				Location			**Loc Qty**		**Loc Code**				
				WA			19						
					69436		19						
D2581		Manufactured	No			100	Each	54.0000	2	2			
Mounting Bracket													
				Location			**Loc Qty**		**Loc Code**				
				WA			54						
					68964		26						
					69258		28						

Dart Aerospace Ltd

W/O:		WORK ORDER CHANGES					
DATE	STEP	PROCEDURE CHANGE	By	Date	Qty	Approval Chief Eng / Prod Mgr	Approval QC Inspector

Part No: _____ **PAR #:** _____ **Fault Category:** _____ **NCR:** Yes No **DQA:** _____ **Date:** _____

Resolution: _____ **Disposition:** _____ **QA: N/C Closed:** _____ **Date:** _____

NCR:		WORK ORDER NON-CONFORMANCE (NCR)						
DATE	STEP	Description of NC Section A	Corrective Action Section B			Verification Section C	Approval Chief Eng	Approval QC Inspector
			Initial Chief Eng	Action Description Chief Eng	Sign & Date			

NOTE: Date & initial all entries

Picklist Print

Friday, May 20, 2011 10:40:55 AM

Work Order ID: 69859

Parent Item: D3172-041

Parent Item Name: Basket Base Assembly

Start Date: 5/20/2011 **Required Date:** 6/10/2011

Start Qty: 1.00 **Required Qty:** 1.00

D3166-1 Basket Hoop	Manufactured	No	100	Each	2.0000	4	4		

Location	Loc Qty	Loc Code
WA	2	
66719	2	

D3174-1 Mounting Lug	Manufactured	No	100	Each	12.0000	8	8	

Location	Loc Qty	Loc Code
WA005	12	
66816	12	

M304EX0.75-16F Expanded Metal Flat SS	Purchased	No	100	sf	506.2978	48	48	

Location	Loc Qty	Loc Code
MAT	209.1053	
117708	209.1053	
WA	297.1925	
115012	114	
117197	167.1584	
117455	16.0341	

Dart Aerospace Ltd

W/O:		WORK ORDER CHANGES					
DATE	STEP	PROCEDURE CHANGE	By	Date	Qty	Approval Chief Eng / Prod Mgr	Approval QC Inspector

Part No: _____ **PAR #:** _____ **Fault Category:** _____ **NCR:** Yes No **DQA:** _____ **Date:** _____

Resolution: _____ **Disposition:** _____ **QA: N/C Closed:** _____ **Date:** _____

NCR:		WORK ORDER NON-CONFORMANCE (NCR)						
DATE	STEP	Description of NC Section A	Corrective Action Section B			Verification Section C	Approval Chief Eng	Approval QC Inspector
			Initial Chief Eng	Action Description Chief Eng	Sign & Date			

NOTE: Date & initial all entries

Picklist Print

Friday, May 20, 2011 10:40:55 AM

Work Order ID: 69859

Parent Item: D3172-041

Parent Item Name: Basket Base Assembly

Start Date: 5/20/2011 **Required Date:** 6/10/2011

Start Qty: 1.00 **Required Qty:** 1.00

M304TS0.750W.065	Purchased	No	100	f	1,321.290	51	53.68421

SAD 11-06-01

304 SQ Tube .75x.75x.065W

Location		Loc Qty	Loc Code
MAT018		1140.8565	
	117598	1000	
	117636	140.8565	
WA007		180.4339906	
	116267	162.707172	
	116763	17.7268186	

53.6842

Dart Aerospace Ltd

W/O:		WORK ORDER CHANGES					
DATE	STEP	PROCEDURE CHANGE	By	Date	Qty	Approval Chief Eng / Prod Mgr	Approval QC Inspector

Part No: _____ **PAR #:** _____ **Fault Category:** _____ **NCR:** Yes No **DQA:** _____ **Date:** _____

Resolution: _____ **Disposition:** _____ **QA: N/C Closed:** _____ **Date:** _____

NCR:		WORK ORDER NON-CONFORMANCE (NCR)						
DATE	STEP	Description of NC Section A	Corrective Action Section B			Verification Section C	Approval Chief Eng	Approval QC Inspector
			Initial Chief Eng	Action Description Chief Eng	Sign & Date			

NOTE: Date & initial all entries

H:\fFORMS\Quality Assurance\approved QA\NCRWO RevE

PARTS LIST FOR D3172-041 BASKET BASE ASSEMBLY

PART NO	QUANTITY	LENGTH A	LENGTH B	DESCRIPTION
D3172-1	2	———	96.00	RIB
D3172-3	2	———	25.50	RIB
D3172-5	6	33.09	———	RIB
D3172-7	3	26.81	———	RIB
D3172-9	1	94.50	N/A	RIB
D2012-117	4	N/A	N/A	CLEVIS
D2327-3	2	N/A	N/A	BUSHING
D2581	2	N/A	N/A	MOUNTING BRACKET
D2232-3	2	N/A	N/A	HINGE PLATE
D3166-1	4	N/A	N/A	RIB
D3174-1	8	N/A	N/A	MOUNTING LUG

SHOP COPY
RETURN TO
ENGINEERING
UNCONTROLLED COPY
SUBJECT TO AMENDMENT
WITHOUT NOTICE
WORK ORDER
NO. 69859
C 2 11/05/20

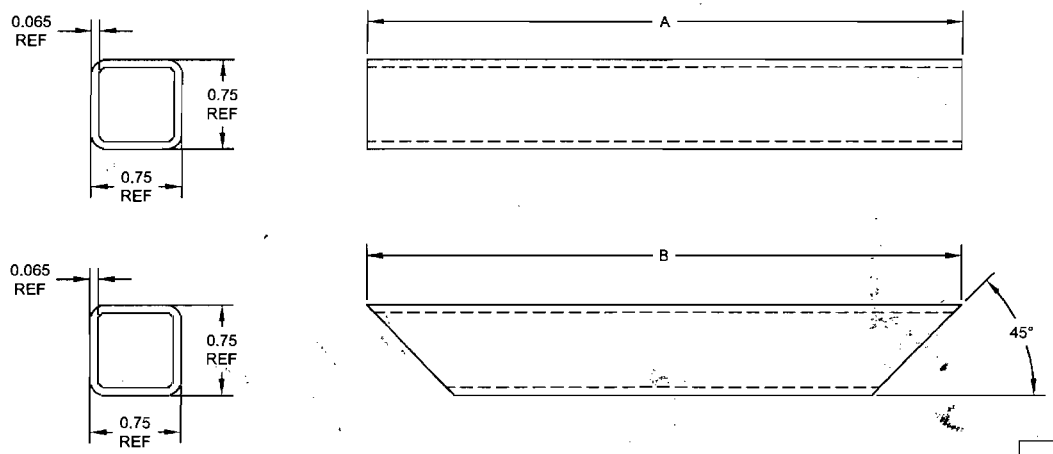

RELEASED
08.05.21

C

NOTES:
1) MATERIAL: AISI 304/316 SS, 3/4 X 3/4 X 0.065 WALL SQUARE TUBING
REF. DART SPEC M304TS0.750W.065
2) MESH MATERIAL: 3/4-16F EXPANDED SS
REF DART SPEC M304EX0.75-16F
3) FINISH: POWDER COAT ENTIRE ASSEMBLY WHITE (4.3.5.2) PER DART QSI 005 4.3
4) TOLERANCES: PER DART QSI 018 UNLESS OTHERWISE NOTED
5) UNITS: INCHES UNLESS OTHERWISE NOTED
6) BREAK SHARP EDGES: 0.005 TO 0.010 MAX
7) IDENTIFICATION: NONE
8) WEIGHT: N/A
9) WELD PER DART QSI 004

REV.	DESCRIPTION	BY	DATE
C	FRAME MATERIAL WAS 0.060 WALL. MESH MATERIAL UPDATED. DRAWING MOVED TO "B" FORMAT AND UPDATED TO CURRENT STANDARDS.	AJS	08.07.03
B	ADD D3172-9 & D2012-117	CP	03.01.07
A	NEW ISSUE	DS	02.12.02

DESIGN	CP	**DART AEROSPACE LTD** HAWKESBURY, ONTARIO, CANADA
DRAWN	AJS	
CHECKED		DRAWING NO. D3172 — REV. C — SHEET 1 OF 3
MFG. APPR.		
APPROVED		TITLE: BASKET BASE ASSEMBLY (EC130) — SCALE: NTS
DE APPR.		
DATE	08.07.03	

COPYRIGHT © 2002 BY DART AEROSPACE LTD
THIS DOCUMENT IS PRIVATE AND CONFIDENTIAL AND IS SUPPLIED ON THE EXPRESS CONDITION THAT IT IS NOT TO BE USED FOR ANY PURPOSE OR COPIED OR COMMUNICATED TO ANY OTHER PERSON WITHOUT WRITTEN PERMISSION FROM DART AEROSPACE LTD.

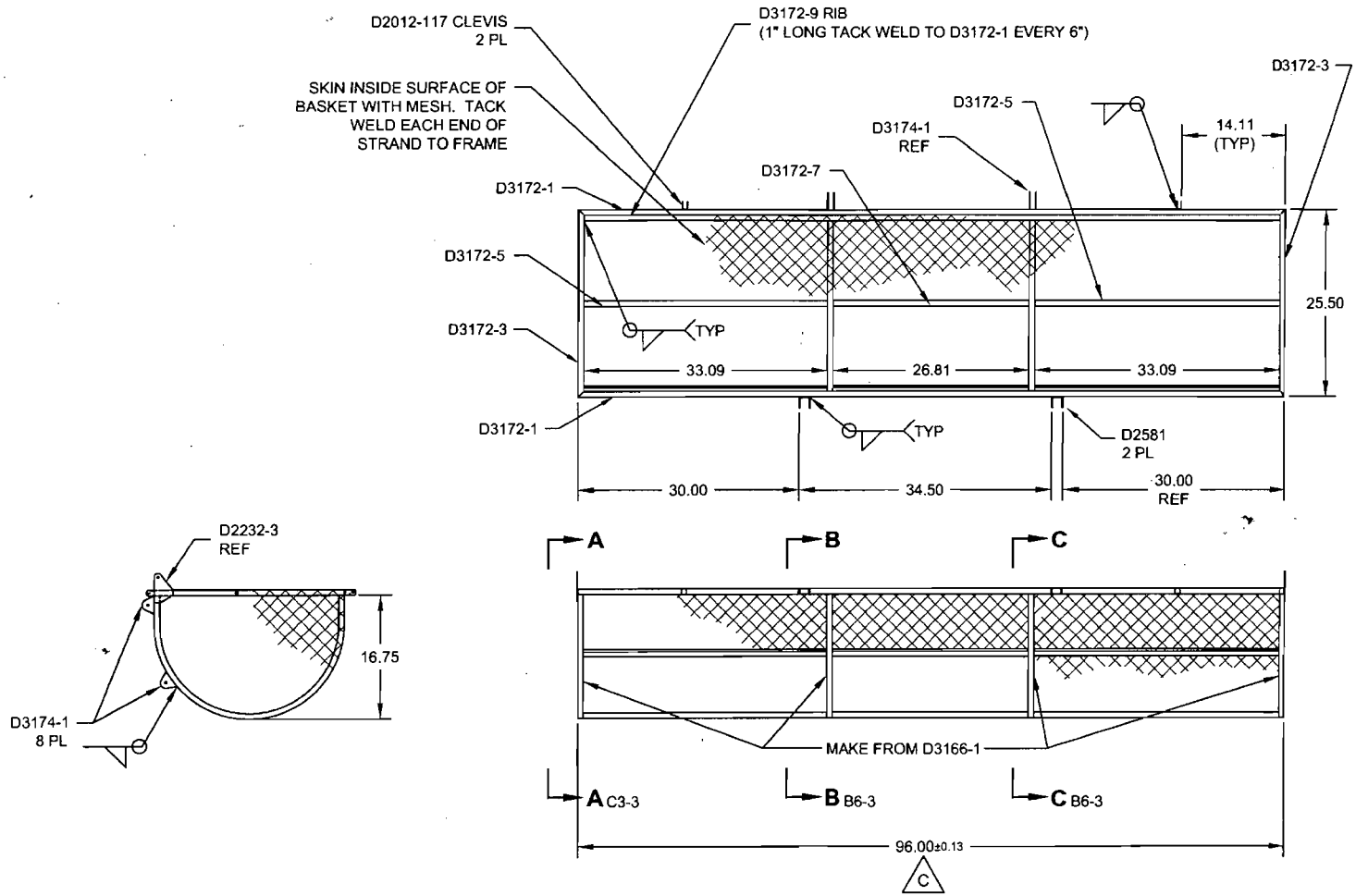

D3172-041 BASKET BASE ASSEMBLY

RELEASED
08 08 21

DESIGN	CP	**DART AEROSPACE LTD** HAWKESBURY, ONTARIO, CANADA
DRAWN	AJS	
CHECKED		DRAWING NO. D3172 — REV. C — SHEET 2 OF 3
MFG. APPR.		
APPROVED		TITLE: BASKET BASE ASSEMBLY (EC130) — SCALE: NTS
DE APPR.		
DATE	08.07.03	

COPYRIGHT © 2002 BY DART AEROSPACE LTD
THIS DOCUMENT IS PRIVATE AND CONFIDENTIAL AND IS SUPPLIED ON THE EXPRESS CONDITION THAT IT IS NOT TO BE USED FOR ANY PURPOSE OR COPIED OR COMMUNICATED TO ANY OTHER PERSON WITHOUT WRITTEN PERMISSION FROM DART AEROSPACE LTD.

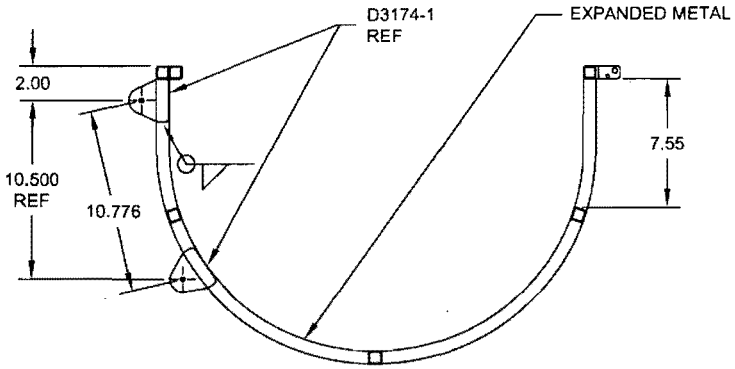

SECTION B-B B5-2
AND SECTION C-C B3-2
RIB DETAIL
SCALE 2X

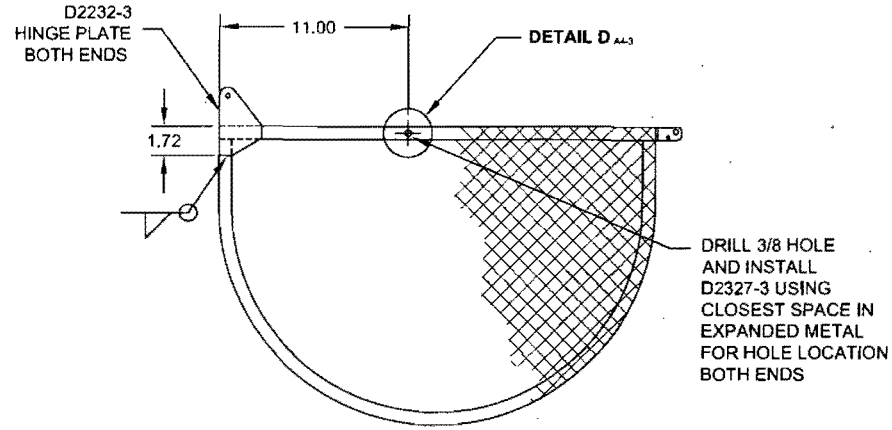

SECTION A-A B5-2
SPACER DETAIL
SCALE 2X

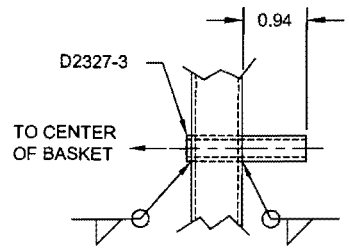

DETAIL D D3-3
SCALE 4X

RELEASED
05-05-21

DESIGN	CP	**DART AEROSPACE LTD** HAWKESBURY, ONTARIO, CANADA
DRAWN	AJS	
CHECKED		DRAWING NO. REV. C
MFG. APPR.		D3172 SHEET 3 OF 3
APPROVED		TITLE SCALE
DE APPR.		BASKET BASE ASSEMBLY (EC130) NTS
DATE	08.07.03	

COPYRIGHT © 2002 BY DART AEROSPACE LTD
THIS DOCUMENT IS PRIVATE AND CONFIDENTIAL AND IS SUPPLIED ON THE EXPRESS CONDITION THAT IT IS NOT TO BE USED FOR ANY PURPOSE OR COPIED OR COMMUNICATED TO ANY OTHER PERSON WITHOUT WRITTEN PERMISSION FROM DART AEROSPACE LTD